Part # 943 Gas Tank Vent (Up)

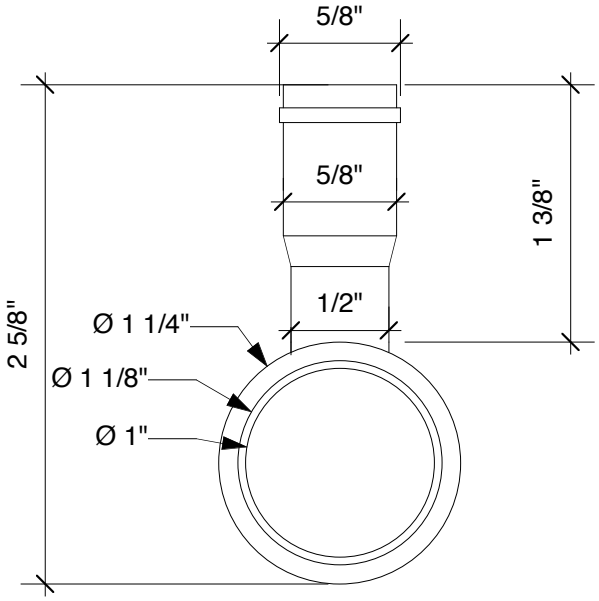


Front

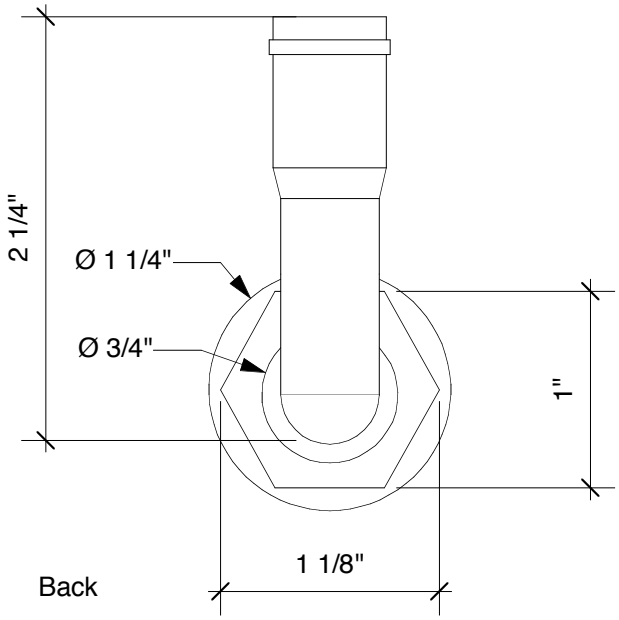


Back

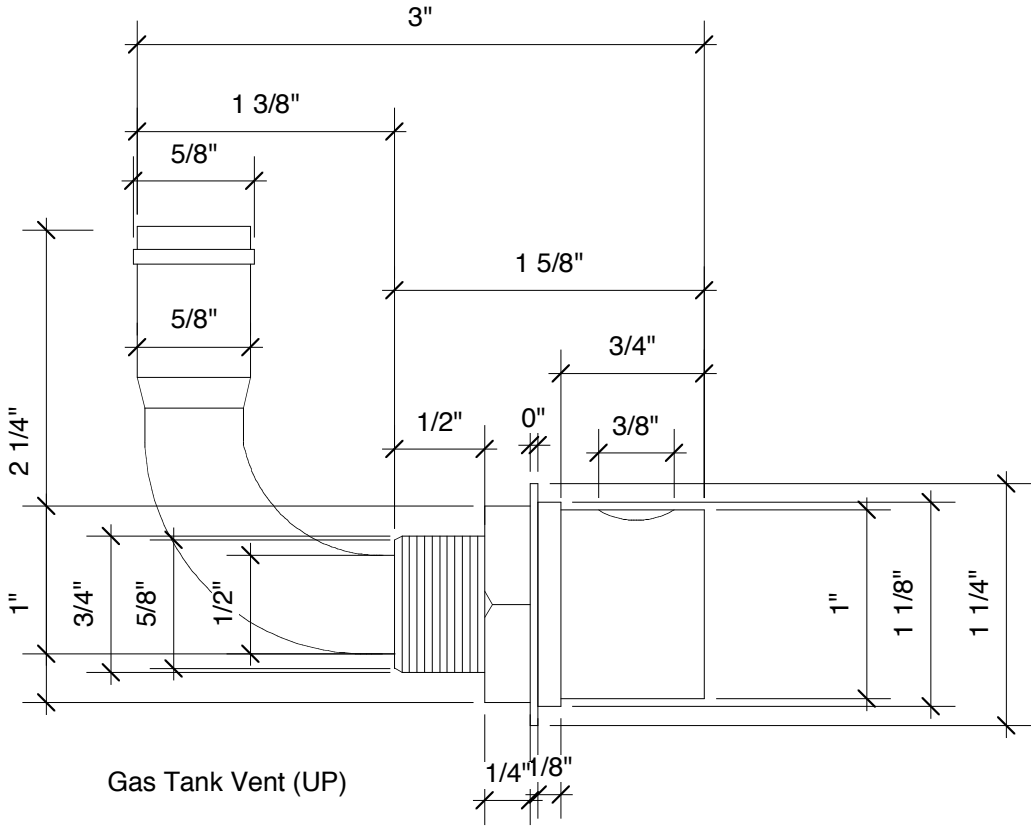


Gas Tank Vent (UP)