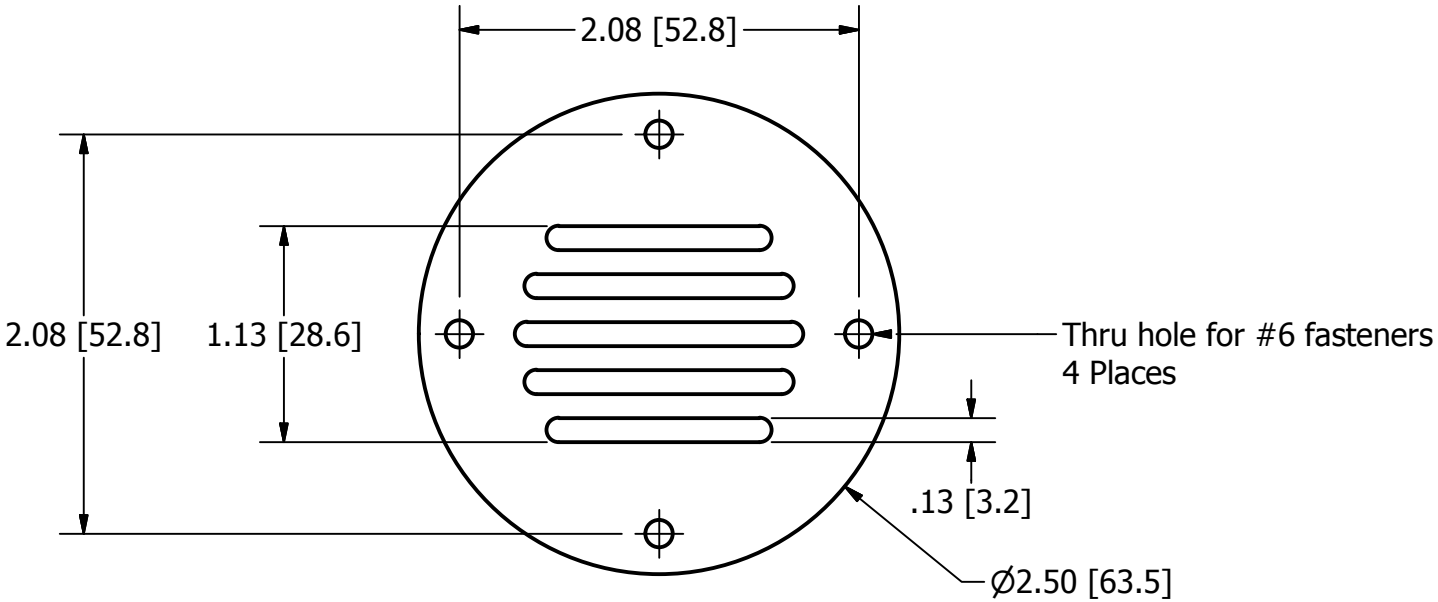

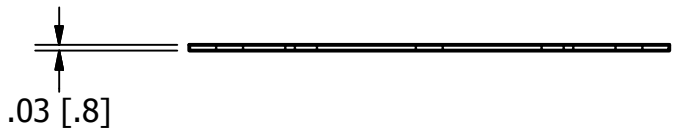

1518

Vent, 2-1/2"