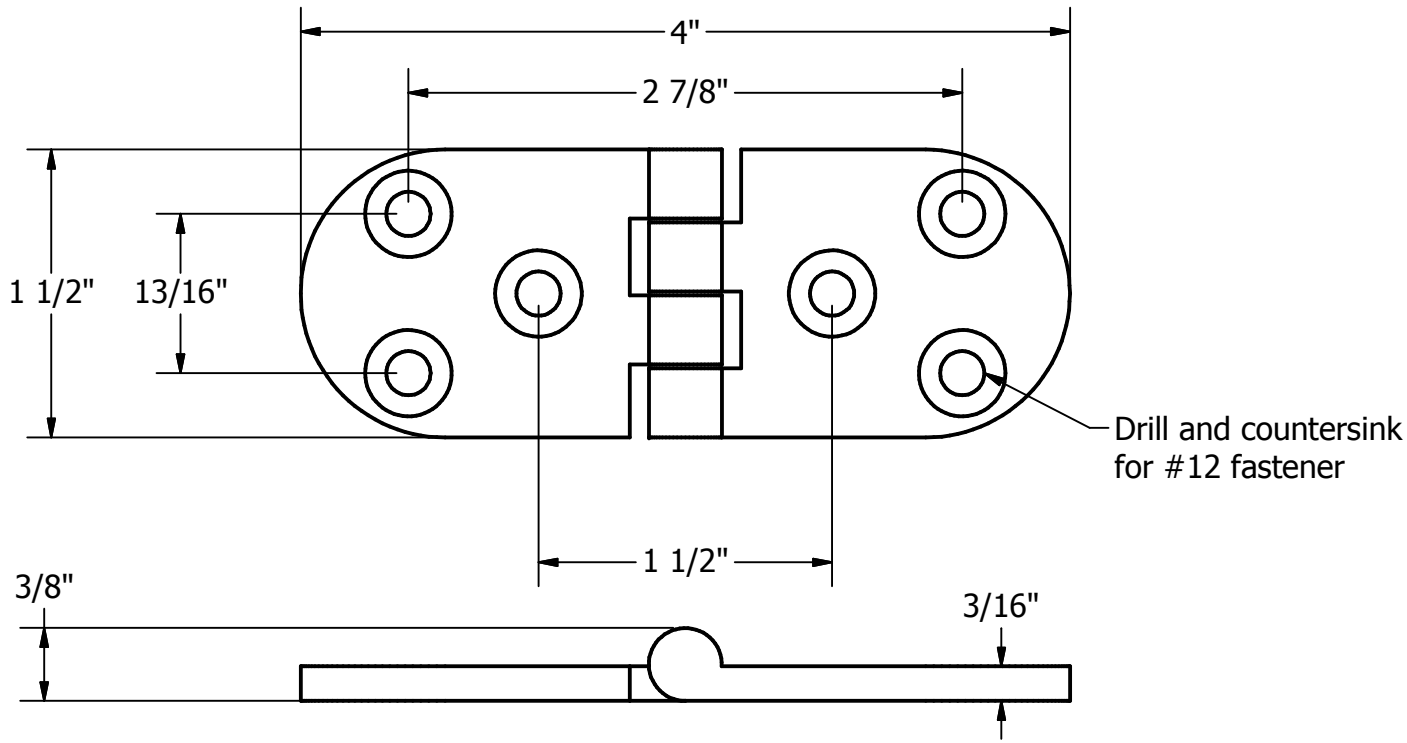

3279

4" x 1-1/2"
Hinge, Bluewater, TM