Marketing Drawing for 425

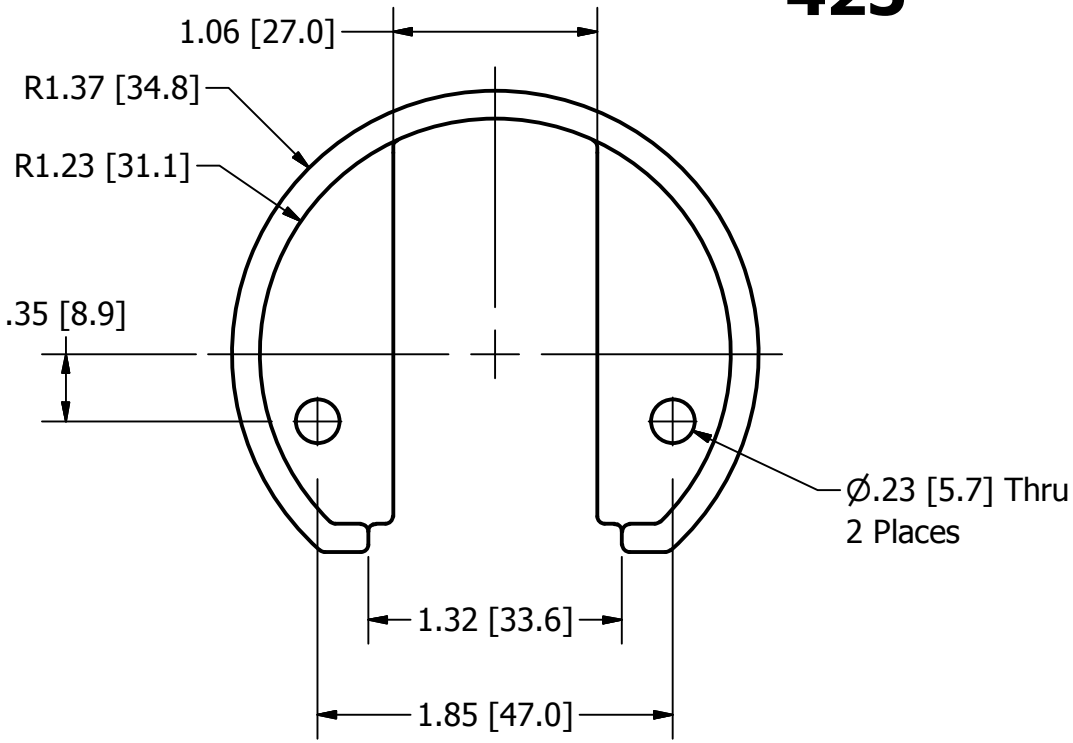

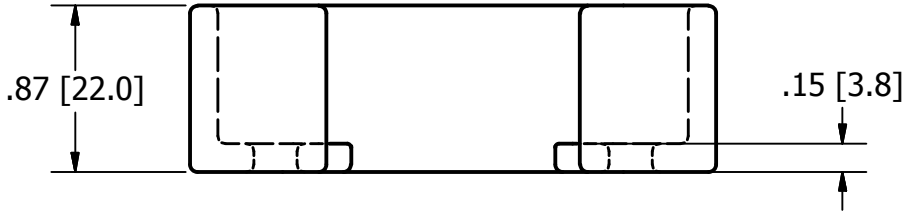

GEM PRODUCTS, INC.

Description

Thick Backing Plate for 2.5" Slam Latch

Size	Part No	Rev	Scale
A	425	0	

Phone: 800.874.4506 | www.gemlux.com